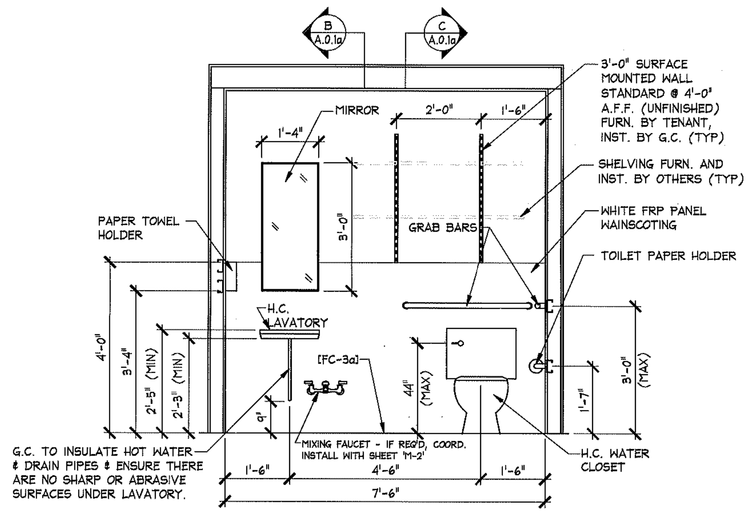

A A.0.1a H.C. TOILET ROOM DETAIL

SCALE : 1/2" = 1'-0"

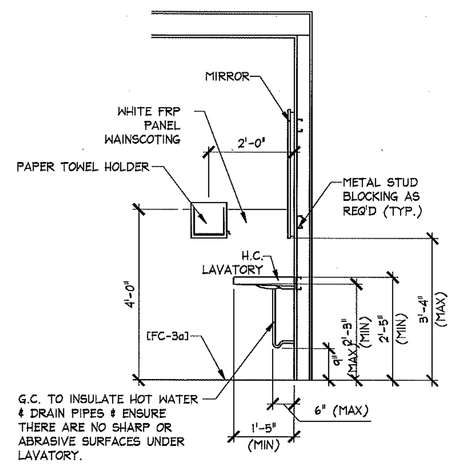

B A.0.1a H.C. TOILET ROOM DETAIL

SCALE : 1/2" = 1'-0"

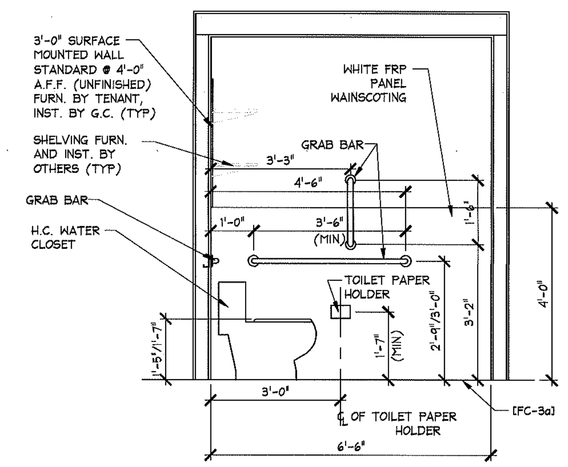

C A.0.1a H.C. TOILET ROOM DETAIL

SCALE : 1/2" = 1'-0"

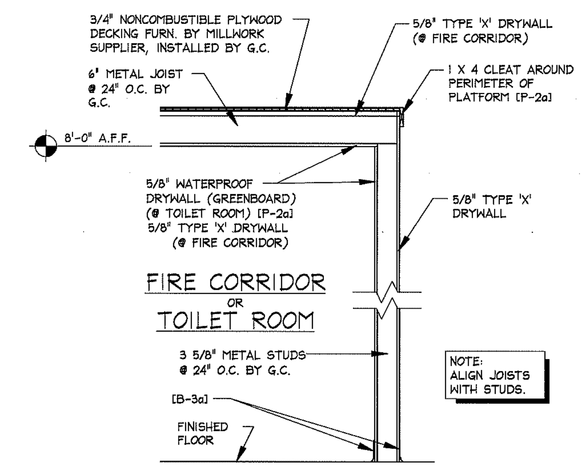

D A.0.1a TYP. PLATFORM ABOVE FIRE CORRIDOR AND TOILET ROOM

SCALE : 3/4" = 1'-0"

NOTE:
- FAUCET CONTROLS & FLUSH VALVE ON TOILET SHALL BE OPERABLE WITH ONE HAND & SHALL NOT REQUIRE TIGHT GRASPING, PINCHING OR TWISTING OF THE WRIST. THE FORCE REQUIRED TO ACTIVATE CONTROLS SHALL BE NO GREATER THAN 5LBF.
- BLOCKING REQUIRED FOR GRAB BAR, PAPER TOWEL HOLDER AND TOILET PAPER HOLDER
- PAINTING CONTRACTOR SHALL CAULK ALL INSIDE WOOD CORNERS AND JOINTS BETWEEN TRIM & WALL PRIOR TO PAINTING.

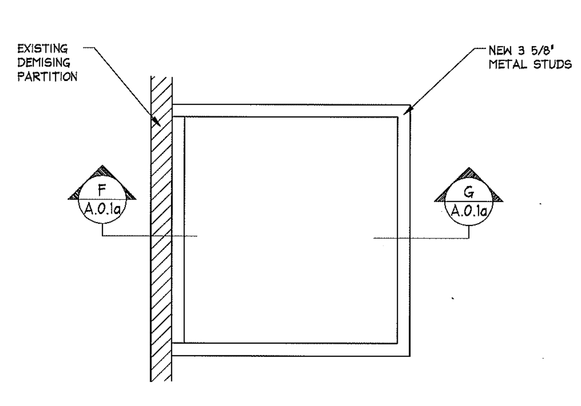

E A.0.1a TOILET ROOM PLAN SCHEMATIC

NOT TO SCALE

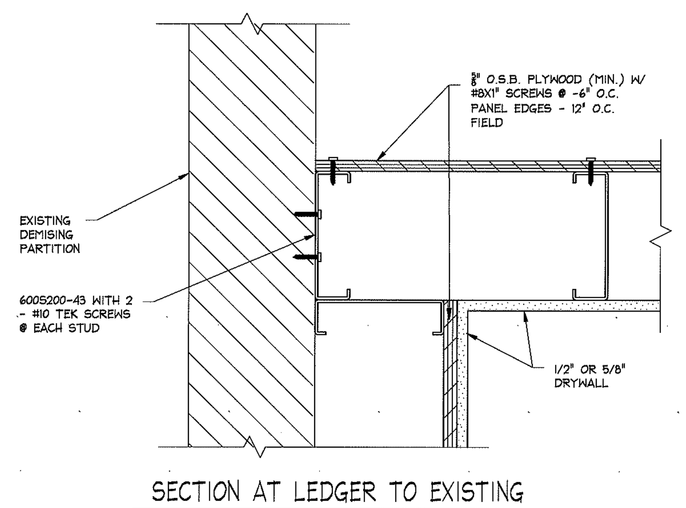

SECTION AT LEDGER TO EXISTING DEMISING PARTITION ATTACHMENT

F A.0.1a

SCALE: 1"=1'-0"

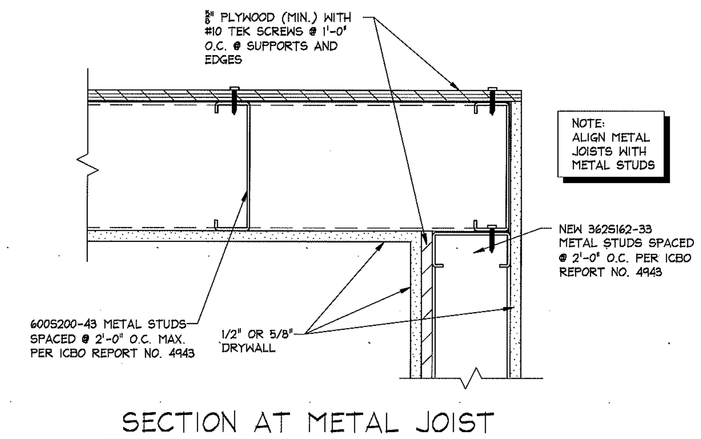

SECTION AT METAL JOIST TO NEW METAL STUD

G A.0.1a

SCALE: 1"=1'-0"

NOTE:
DETAILS, NOTES, AND/OR SPECIFICATIONS ON THIS SHEET NOT LISTED ALPHABETICALLY OR NUMERICALLY HAVE BEEN PURPOSELY OMITTED AND DO NOT PERTAIN TO THIS PROJECT.

aerie
BY AMERICAN EAGLE

PAUL SLOWIK & ASSOC., ARCHITECT
8980 Perry Highway
Pittsburgh, PA 15237
(412) 367-7770

AMERICAN EAGLE OUTFITTERS
77 Ben Mead Street
Pittsburgh, PA 15203
(412)-432-3300

PRELIMINARY DATE
REVISED DATE
FOR CONSTRUCTION DATE 7/3/08

TOILET ROOM DETAILS

AERIE
Logan Valley Mall
Altoona, PA

Space # 430

Store No. 2821

Drawn by:
Approved
Drawing No. A.0.1a

6/30/2008 2:46:18 PM