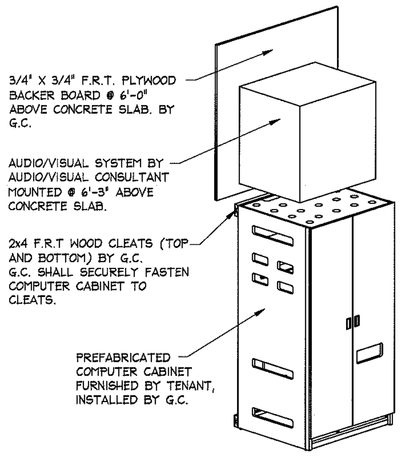

A1 / F.2.2 COMPUTER CABINET

SCALE: N.T.S.

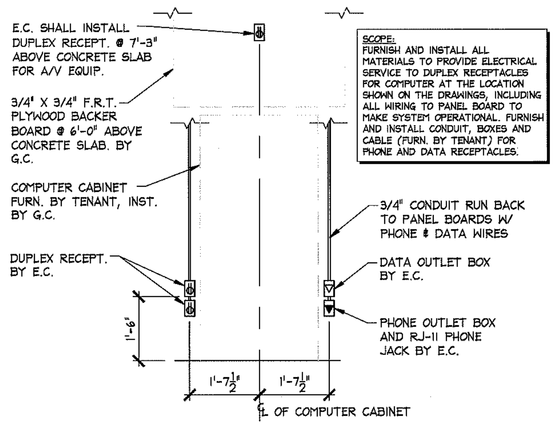

A2 / F.2.2 COMPUTER CABINET

SCALE: 1/2" = 1'-0"

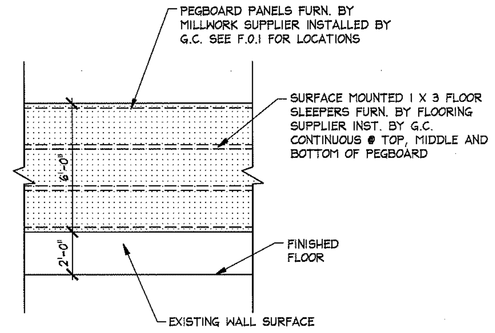

B / F.2.2 PEGBOARD PANEL @ WALL

SCALE: 1/4" = 1'-0"

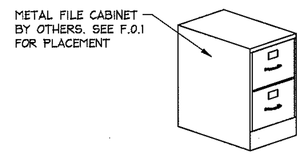

C / F.2.2 FILE CABINET

SCALE: N.T.S.

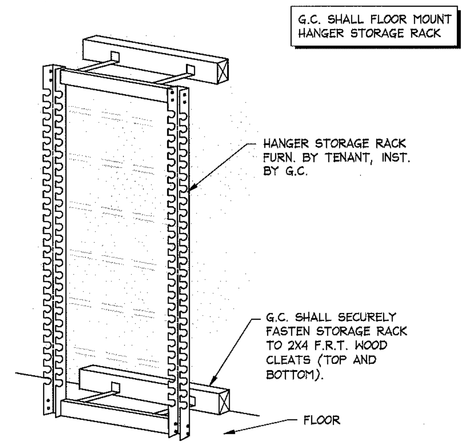

D / F.2.2 HANGER STORAGE RACK

SCALE: N.T.S.

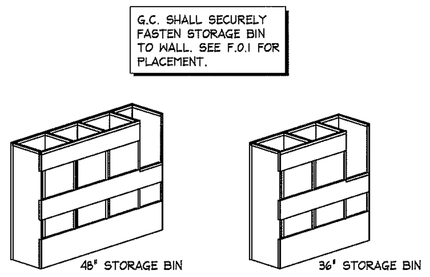

E / F.2.2 HANGE BAR STORAGE BIN

SCALE: N.T.S.

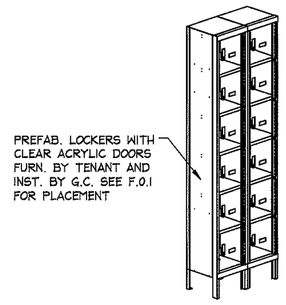

F / F.2.2 EMPLOYEE LOCKERS

SCALE: N.T.S.

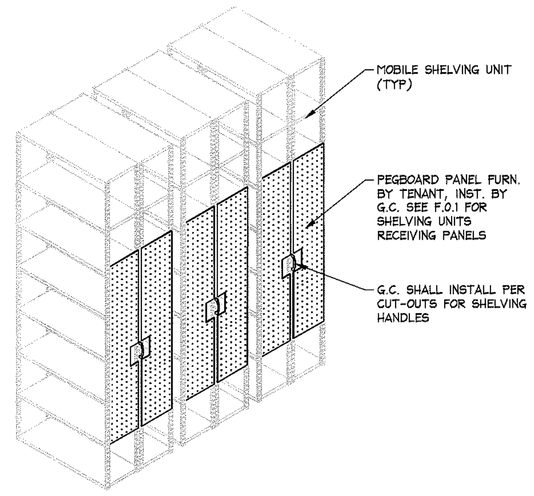

G / F.2.2 PEGBOARD PANEL @ SHELVING

SCALE: N.T.S.

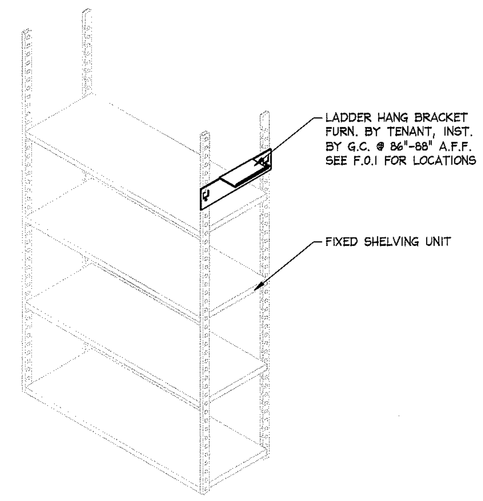

H / F.2.2 LADDER HANG BRACKET

SCALE: N.T.S.

NOTE:
DETAILS, NOTES, AND/OR SPECIFICATIONS ON THIS SHEET NOT LISTED ALPHABETICALLY OR NUMERICALLY HAVE BEEN PURPOSELY OMITTED AND DO NOT PERTAIN TO THIS PROJECT.

aerie
BY AMERICAN EAGLE

PAUL SLOWIK & ASSOC., ARCHITECT
8980 Perry Highway
Pittsburgh, PA 15237
(412) 367-7770

AMERICAN EAGLE OUTFITTERS
77 East Mead Street
Pittsburgh, PA 15203
(412)-432-3300

PRELIMINARY DATE
REVISED DATE
FOR CONSTRUCTION DATE 7/2/08

STOCKROOM FIXTURE DETAILS

AERIE
Logan Valley Mall
Altoona, PA

Space # 430

Store No. 2821

Drawn by:
Approved
Drawing No. F.2.2

6/30/2008 2:51:55 PM