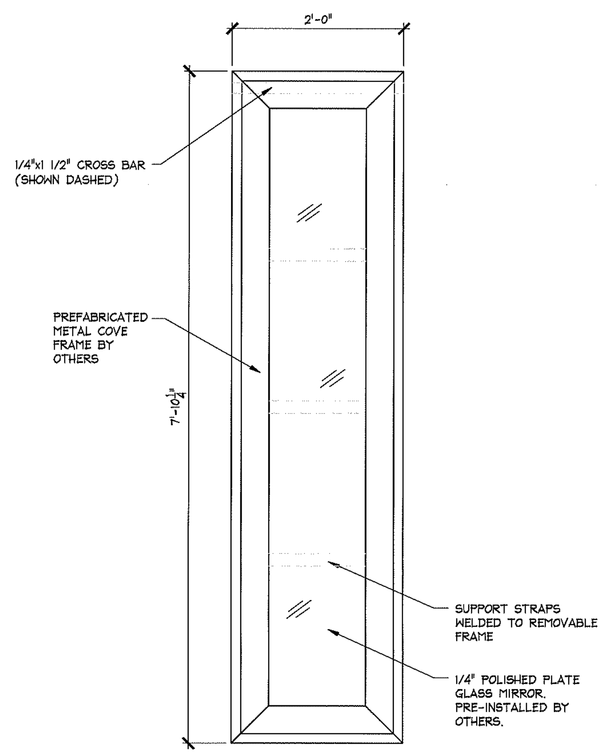

A F.2.3 PREFABRICATED MIRROR

SCALE: 1"=1'-0"

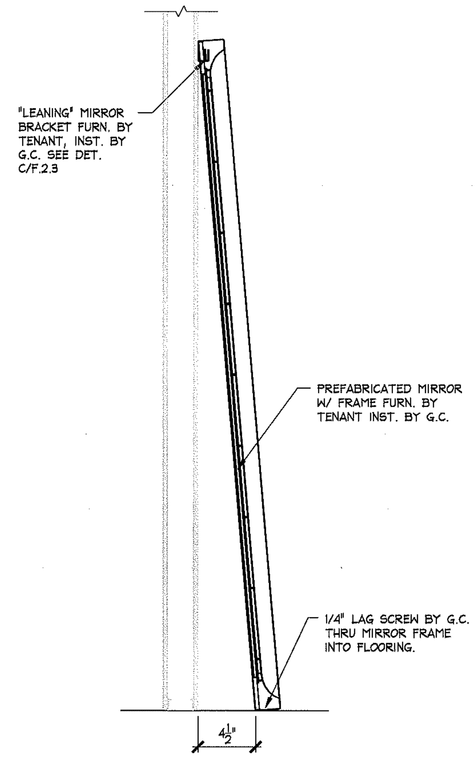

B F.2.3 "LEANING" MIRROR SECTION

SCALE: 1"=1'-0"

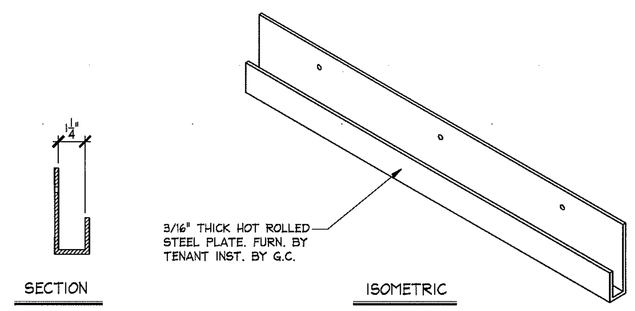

C F.2.3 "LEANING" MIRROR WALL BRACKET

SCALE: 3"=1'-0"

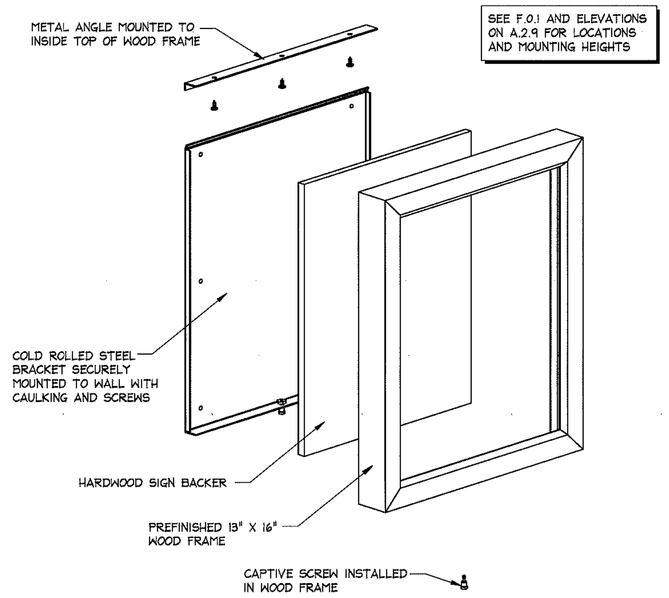

D F.2.3 FITTING ROOM "SECURITY" FRAME

SCALE: 3"=1'-0"

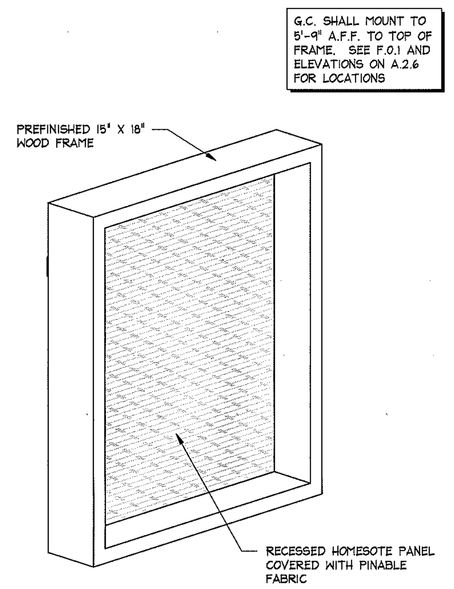

E F.2.3 "BRA" FRAME

SCALE: 3"=1'-0"

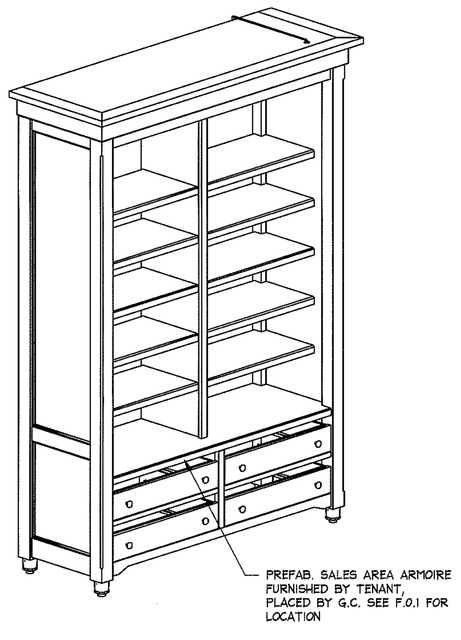

F F.2.3 CUSTOM SALES AREA ARMOIRE

SCALE: N.T.S.

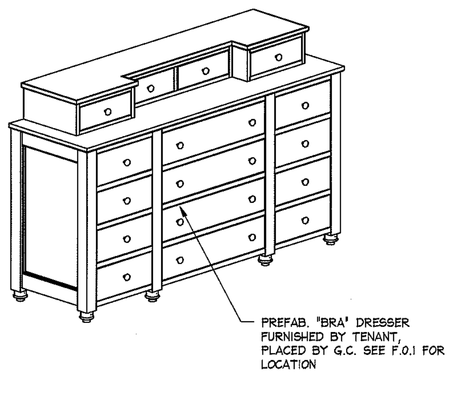

G F.2.3 CUSTOM "BRA" DRESSER

SCALE: N.T.S.

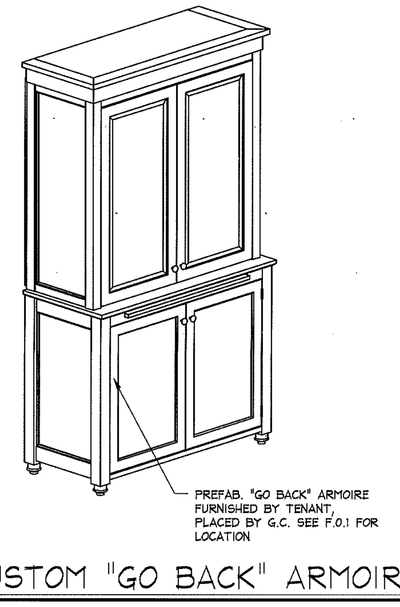

H F.2.3 CUSTOM "GO BACK" ARMOIRE

SCALE: N.T.S.

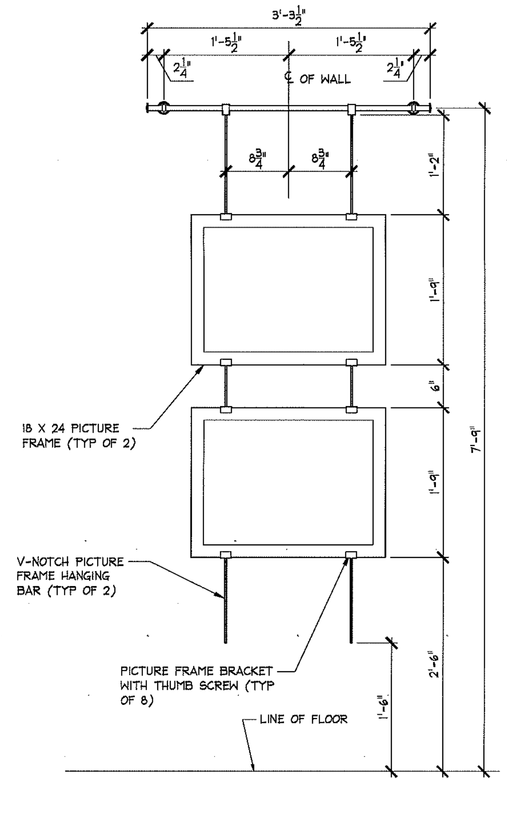

J F.2.3 SMALL GRAPHIC HANGING SYSTEM DETAIL

SCALE: 1"=1'-0"

NOTE:
DETAILS, NOTES, AND/OR SPECIFICATIONS ON THIS SHEET NOT LISTED ALPHABETICALLY OR NUMERICALLY HAVE BEEN PURPOSELY OMITTED AND DO NOT PERTAIN TO THIS PROJECT.

aerie
BY AMERICAN EAGLE

PAUL SLOWIK & ASSOC., ARCHITECT
8980 Perry Highway
Pittsburgh, PA 15237
(412) 367-7770

AMERICAN EAGLE OUTFITTERS
77 Sixth Metal Street
Pittsburgh, PA 15203
(412)-432-3300

PRELIMINARY DATE
REVISED DATE
FOR CONSTRUCTION DATE 7/2/08

SALES AREA/FITTING ROOM FIXTURE DETAILS

AERIE
Logan Valley Mall
Altoona, PA

Space # 430

Store No. 2821

Drawn by:
Approved
Drawing No. F.2.3

4/30/2009 2:50:04 PM