CONTROLER INPUT DETAILS

Questions? : Please Call. See EMS Cover Sheet for Contact Info.

SPACE TEMP

EC TO MOUNT SPACE SENSOR 5' AFF.
SEE DRAWING EMS-1 FOR LOCATION.

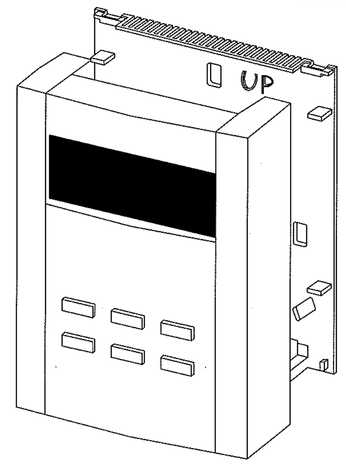

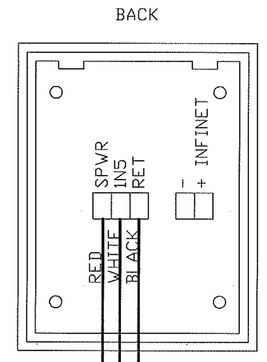

TAPE BACK GREEN

1
18/4

OUTDOOR AIR TEMP SENSOR

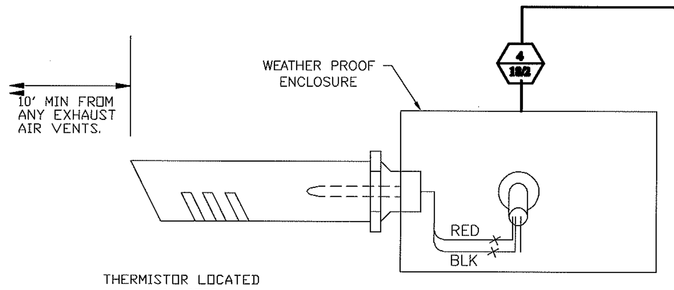

- TERMINATIONS OF OUTSIDE AIR SENSOR SHALL BE MADE BY EC.
- EC SHALL MOUNT SENSOR ON NORTH SIDE OF AHU CONDENSING UNIT (IF POSSIBLE).
- MOUNT OA SENSOR CLEAR OF ANY SERVICE DOOR!!!
- NOTE: ONE OA SENSOR PER SITE.

#NOTE: FOR NEW SPLIT SYSTEM AHU INSTALLATIONS:
EC TO COORDINATE/PLAN FOR OA SENSOR WIRE TO BE PULLED THROUGH THE SAME ROOF PENETRATION AS THE LOW-VOLTAGE CONTROL WIRING FOR THE AHU'S CONDENSING UNIT WHENEVER POSSIBLE TO AVOID THE NEED FOR A SEPERATE ROOF PENETRATION.

SUPPLY AIR TEMP

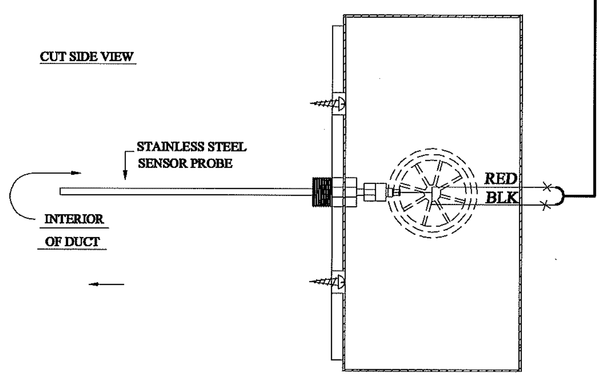

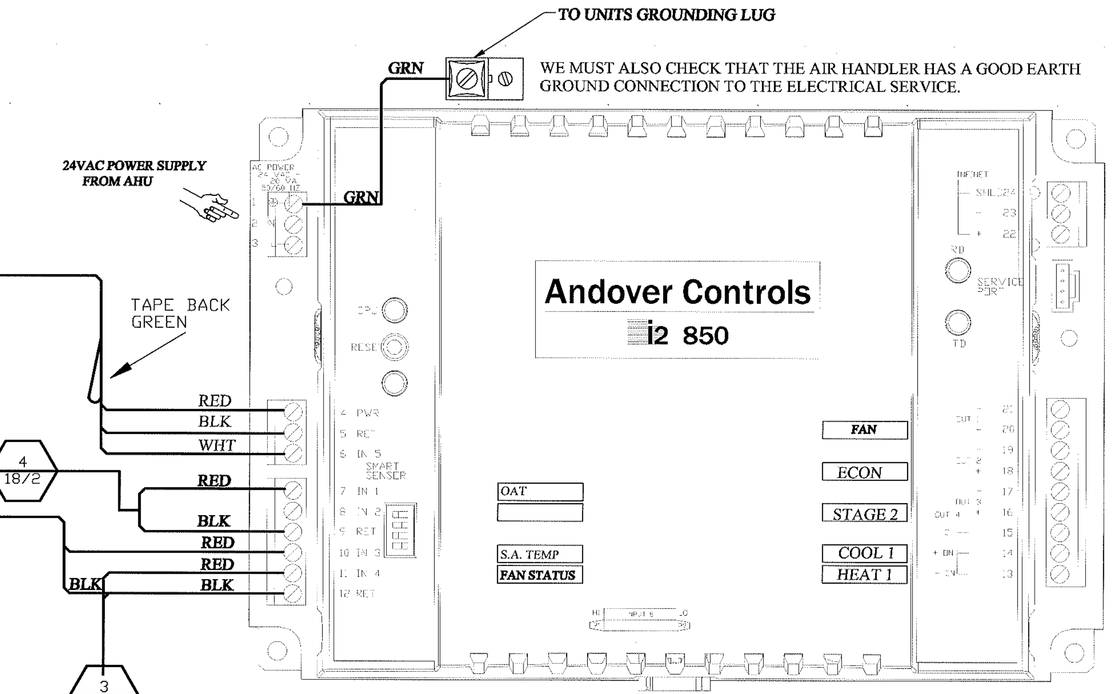

TAPE BACK GREEN

4
18/2

2
18/2

3
18/2

NOTE:
1) DO NOT MOUNT ON ACCESS PANELS.
2) DO NOT COVER UNITS MODEL # OR TAGS.
3) DO NOT MOUNT i2850 IN FAN COMPARTMENT.
4) MOUNT INDOORS/BELOW ROOF CURB ONLY - ON OR NEAR AIR HANDLER.

SUPPLY FAN STATUS

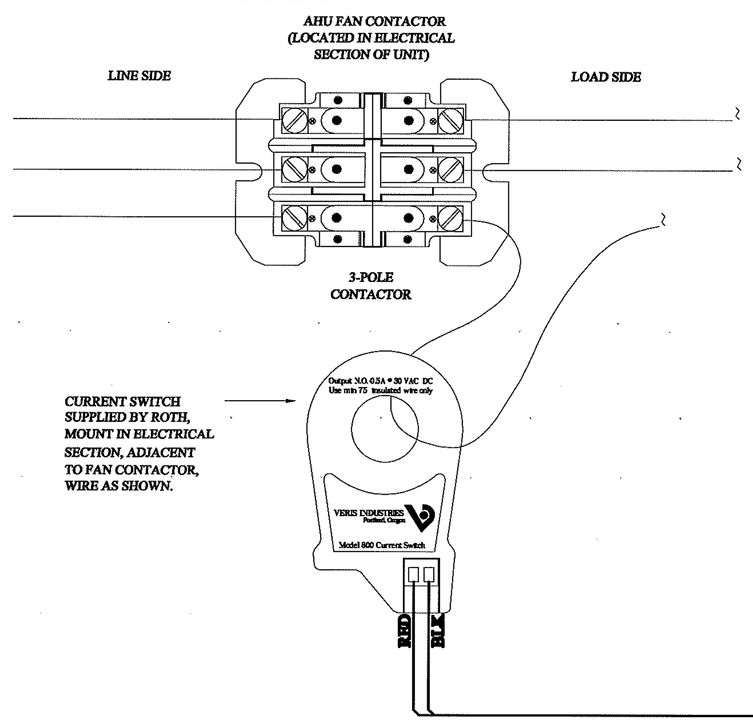

AMERICAN EAGLE OUTFITTERS

PAUL SLOWIK & ASSOC., ARCHITECT
8980 Perry Highway
Pittsburgh, PA 15237
(412) 367-7770

AMERICAN EAGLE OUTFITTERS
77 Fox Metal Street
Pittsburgh, PA 15203
(412)-432-3300

PRELIMINARY DATE
REVISED DATE 7/2/08
FOR CONSTRUCTION DATE

HVAC CONTROLLER INPUT DETAIL

AMERICAN EAGLE OUTFITTERS
Logan Valley Mall
Altoona, PA

Space # 430

Store No. 2821

Drawn by:
Approved
Drawing No.

EMS.4

6/30/2008 2:49:43 PM