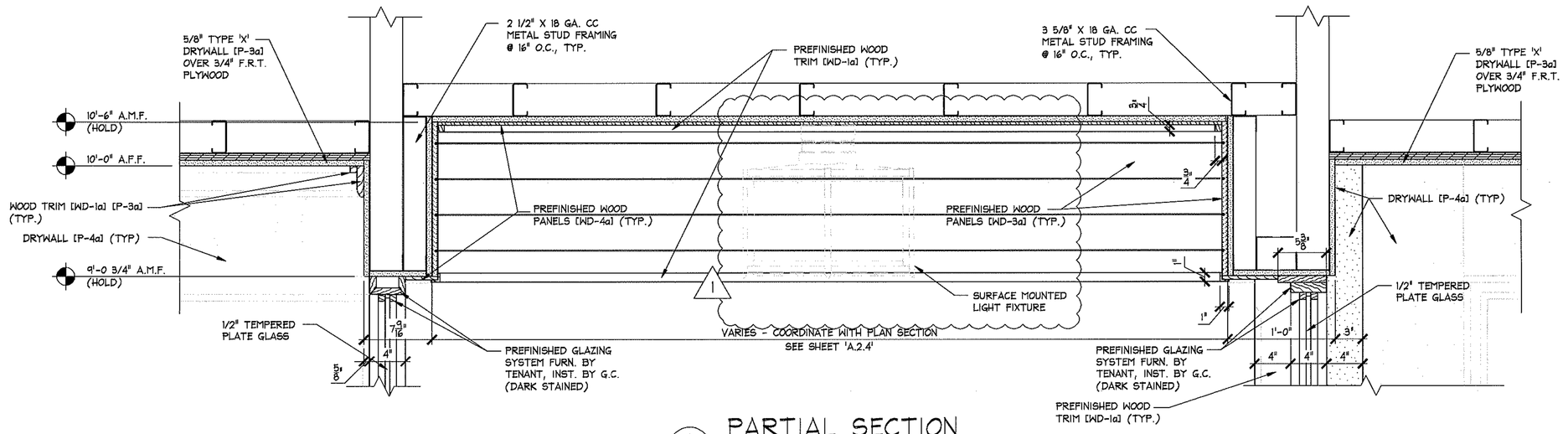

A / A.2.5b PARTIAL SECTION

SCALE: 1 1/2" = 1' - 0"

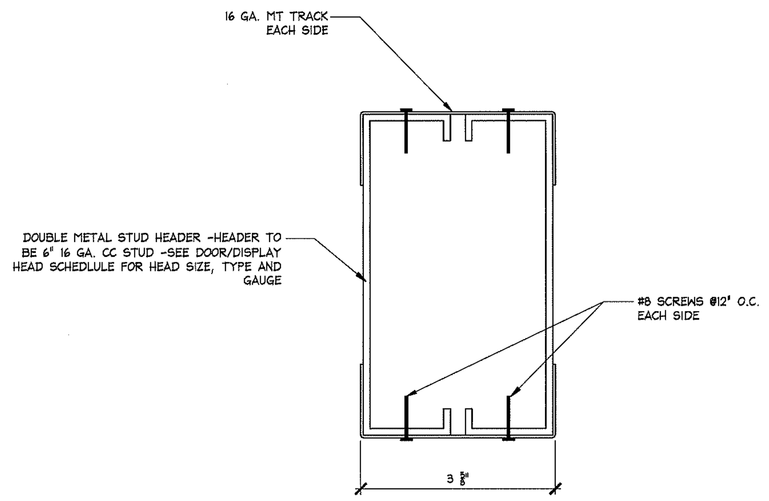

B / A.2.5b DOUBLE METAL STUD HEADER

NOT TO SCALE

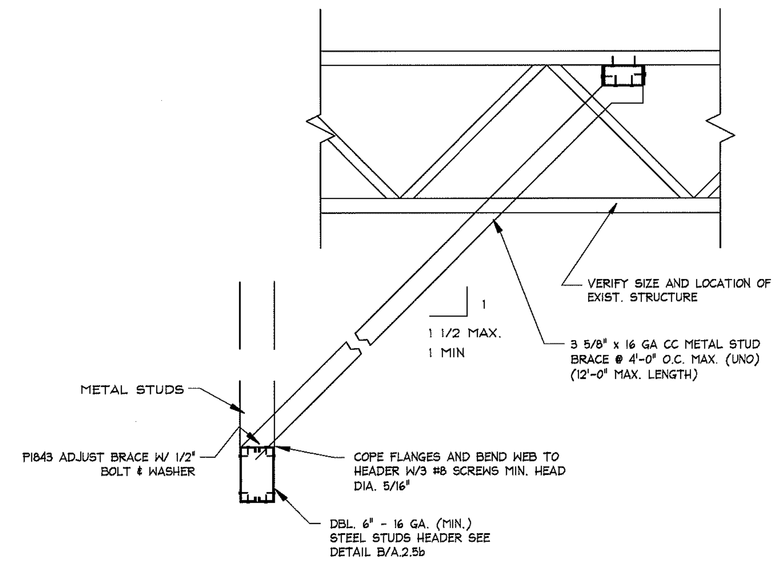

D / A.2.5b HEADER BRACE DETAIL

NOT TO SCALE

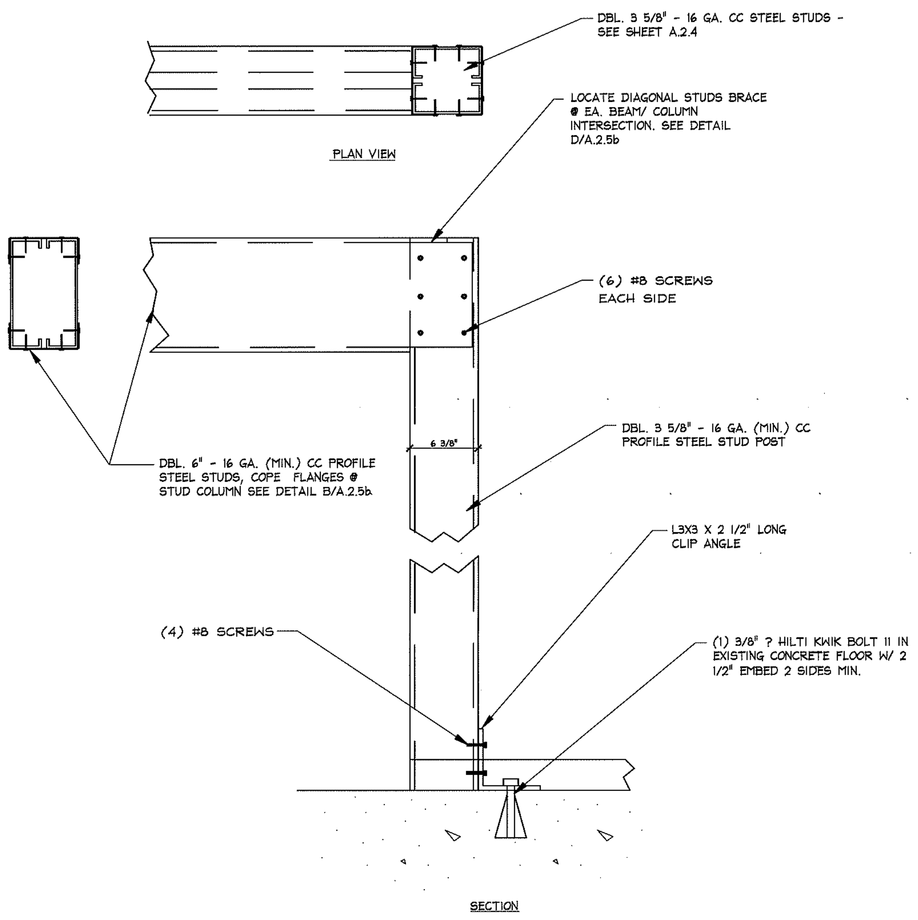

C / A.2.5b HEADER/POST DETAIL

NOT TO SCALE

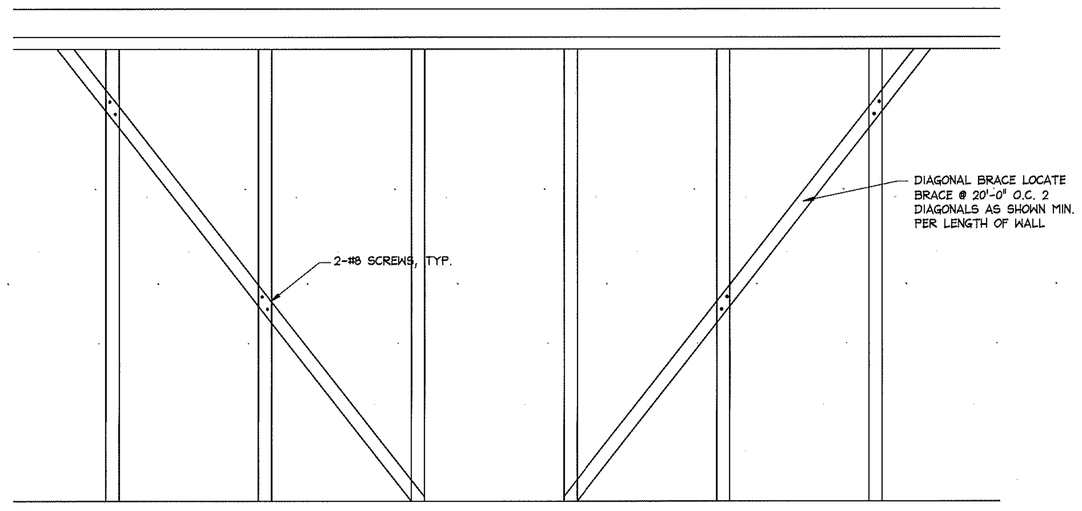

E / A.2.5b DETAIL

NOT TO SCALE

NOTE:
IF REQUIRED BY LANDLORD OR BUILDING DEPARTMENT, G.C. SHALL FURNISH AND INSTALL 5/8" TYPE 'X' FIRECODE DRYWALL TO STRUCTURE ABOVE AND FIRE SEAL FOR A ONE HOUR RATING.

NOTE:
REGARDING GLAZING STOP ATTACHMENT:
G.C. SHALL FASTEN WOOD GLAZING STOPS WITH #8 SCREWS @ 12" O.C. WITH 5/8" MIN. EMBEDED (TYP.).

NOTE:
PAINTING CONTRACTOR SHALL CAULK ALL INSIDE WOOD CORNERS AND JOINTS BETWEEN TRIM AND WALL PRIOR TO PAINTING

KEY NOTES:

(10) SIGN FURNISHED BY SIGN CONSULTANT - INSTALLED BY G.C.SEE SHEET 'SIGN-1' FOR MORE INFORMATION.

NOTE:
LANDLORD'S BULKHEAD CONSTRUCTION INCLUDING BUT NOT LIMITED TO, SOFFIT, DUCTWORK, PIPING, LATERAL STRUCTURAL BRIDGING, ROOF DECK ETC. SHALL NOT BE USED TO SUPPORT TENANT'S STOREFRONT. G.C. SHALL DIAGNALLY BRACE STOREFRONT FRAMING TO BUILDING STRUCTURE WITH 3 5/8"x 20 GA. METAL STUDS AT 48" O.C.

NOTE:
DETAILS, NOTES, AND/OR SPECIFICATIONS ON THIS SHEET NOT LISTED ALPHABETICALLY OR NUMERICALLY HAVE BEEN PURPOSELY OMITTED AND DO NOT PERTAIN TO THIS PROJECT.

aerie BY AMERICAN EAGLE

FRCH DESIGN WORLDWIDE
311 Elm Street, Suite 600
Cincinnati, OH 45202
(513) 241-3000

AMERICAN EAGLE OUTFITTERS
150 Thorn Hill Dr. - P.O. 788
Warrendale, Pa. 15095
(724) 776-4857

PRELIMINARY DATE
REVISED DATE
FOR CONSTRUCTION DATE 4/23/08

3-14-08 GENERAL REVISIONS AEO

STOREFRONT SECTIONS

AERIE
Augusta Mall
Augusta, GA

Space # 1425

Store No. 2727

Drawn by:
Approved

Drawing No. A.2.5b

4/21/2008 4:19:37 PM