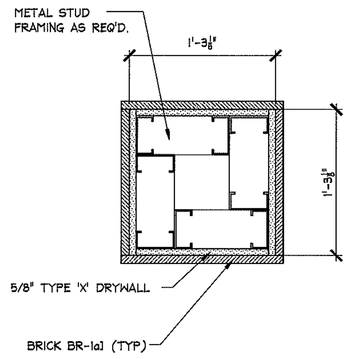

A / A.2.8 PLAN SECTION AT BRICK COLUMN

SCALE: 1 1/2" = 1' - 0"

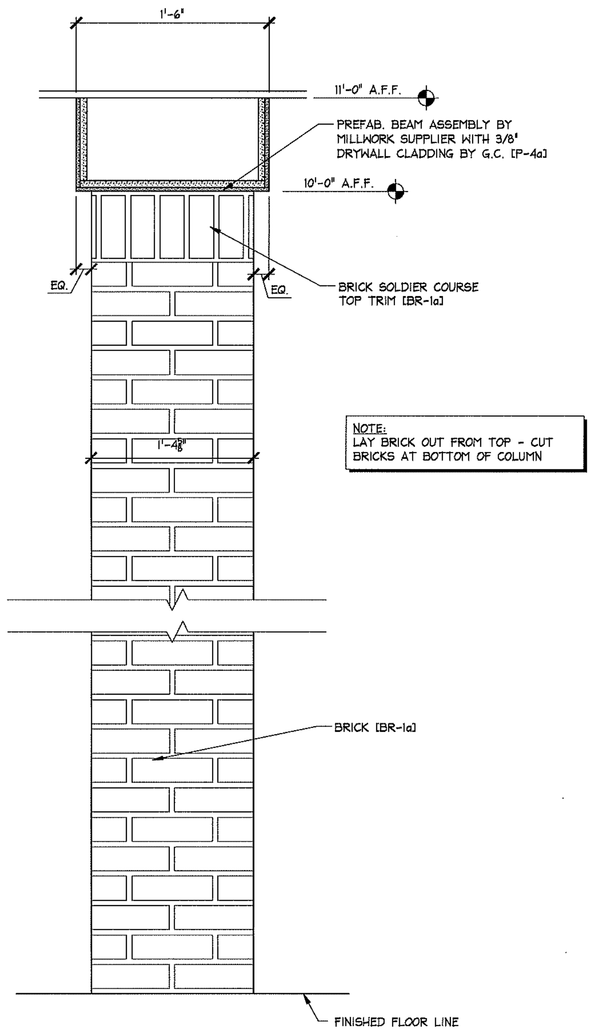

NOTE:
LAY BRICK OUT FROM TOP - CUT BRICKS AT BOTTOM OF COLUMN

3

B / A.2.8 BRICK COLUMN ELEVATION

SCALE: 1 1/2" = 1' - 0"

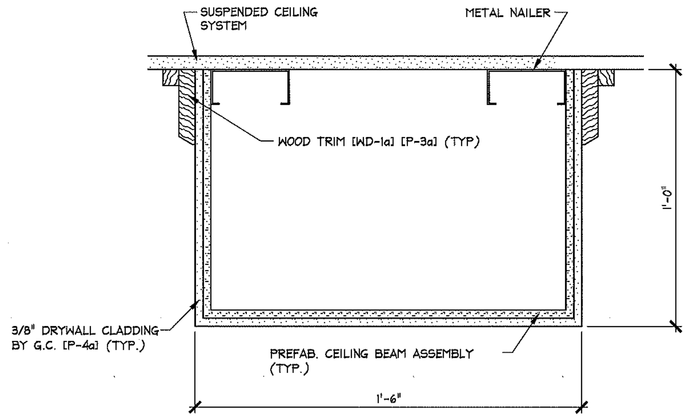

C / A.2.8 PREFAB CEILING BEAM ASSEMBLY

SCALE: 3" = 1' - 0"

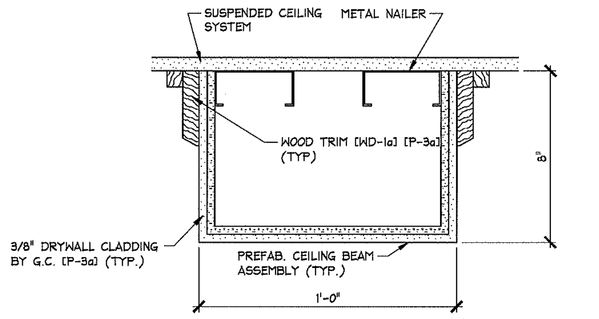

D / A.2.8 PREFAB CEILING BEAM ASSEMBLY

SCALE: 3" = 1' - 0"

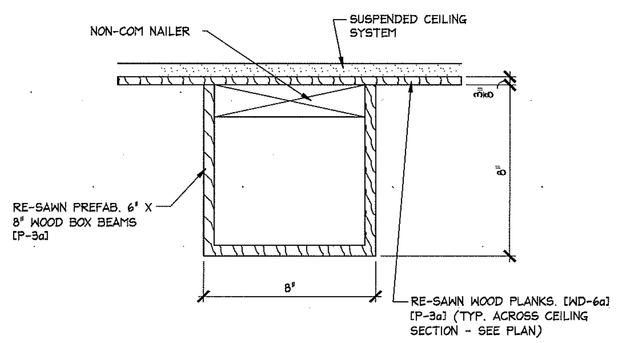

E / A.2.8 PREFAB BOX BEAM/WOOD CEILING

SCALE: 3" = 1' - 0"

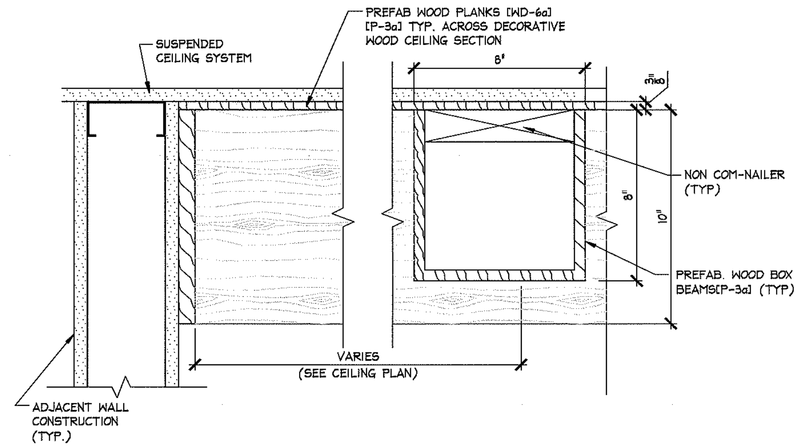

F / A.2.8 PREFAB WOOD BOX BEAM ASSEMBLY DETAIL

SCALE: 3" = 1' - 0"

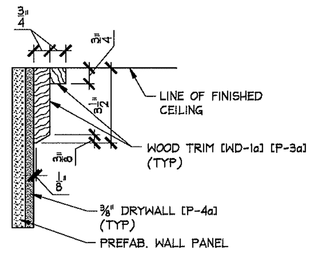

K / A.2.8 CEILING TRIM

SCALE: 3" = 1' - 0"

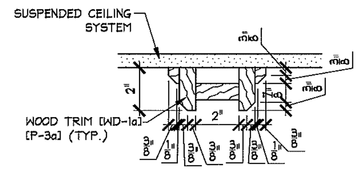

N / A.2.8 FITTING ROOM CEILING TRIM ASSEMBLY

SCALE: 3" = 1' - 0"

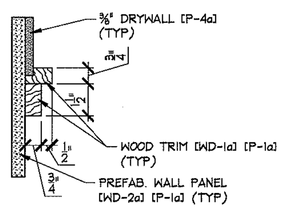

L / A.2.8 SALES AREA WALL TRIM

SCALE: 3" = 1' - 0"

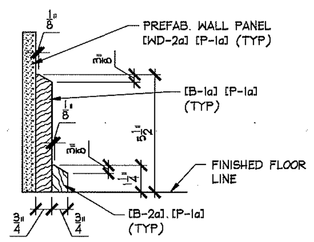

M / A.2.8 BASE TRIM

SCALE: 3" = 1' - 0"

NOTE:
DETAILS, NOTES, AND/OR SPECIFICATIONS ON THIS SHEET NOT LISTED ALPHABETICALLY OR NUMERICALLY HAVE BEEN PURPOSELY OMITTED AND DO NOT PERTAIN TO THIS PROJECT.

aerie BY AMERICAN EAGLE

FRCH DESIGN WORLDWIDE
311 Elm Street, Suite 600
Cincinnati, OH 45202
(513) 241-3000

AMERICAN EAGLE OUTFITTERS
150 Thorn Hill Dr. - P.O. 788
Warrendale, Pa. 15095
(724) 776-4857

PRELIMINARY DATE _____
REVISE DATE _____
FOR CONSTRUCTION DATE 4/23/08

A	4-8-08	GENERAL REVISION

COLUMN & MISC. TRIM DETAILS

AERIE
Augusta Mall
Augusta, GA

Space # 1425

Store No. 2727

Drawn by:
Approved
Drawing No. A.2.8

4/21/2008 4:14:08 PM